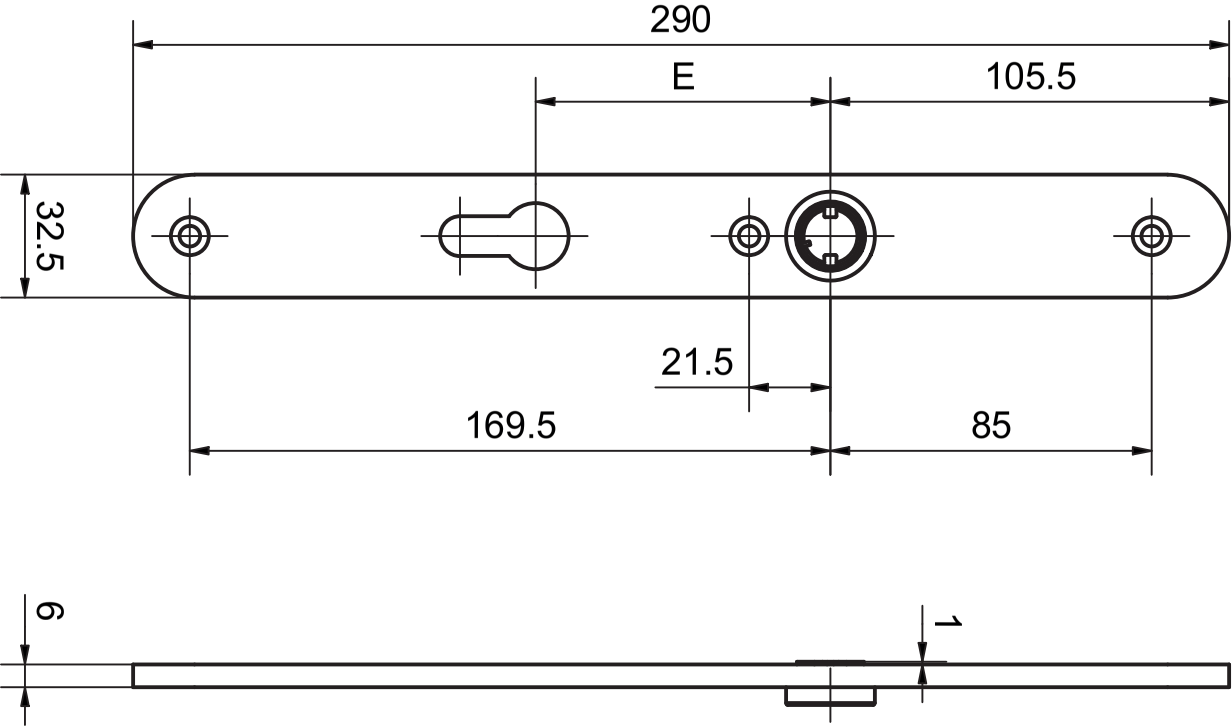
290
E
105.5
32.5
21.5
169.5
85
6
1